RFLINK-IO

The magic finger is no longer a myth

RFLINK-IO makes the wireless switch real

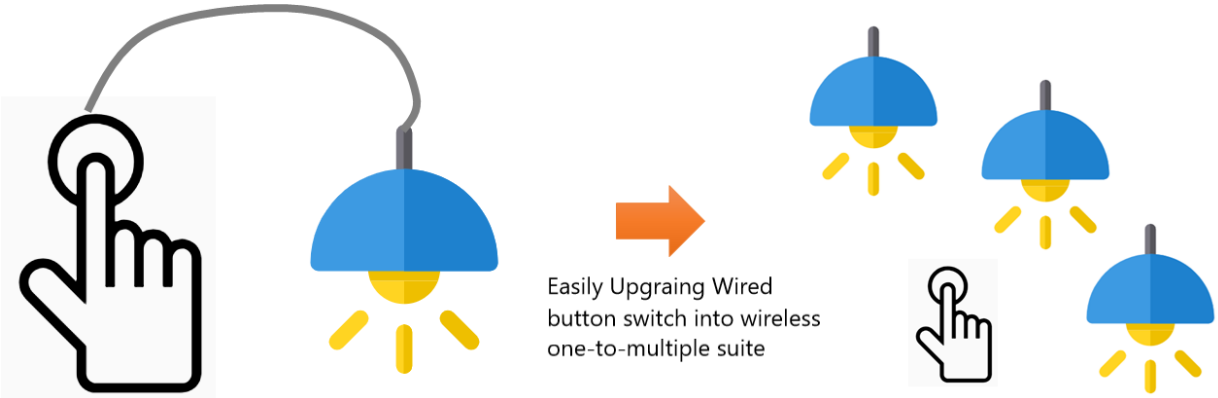

Directory

Module appearance and dimension 22

Module characteristics 22

Pin definition.....3 3

How to use 33

Example of use: Control the 4 switches remotely via Arduino 44

Use the ID_LAT to start transmitting/receiving messages with the new connection5

terminal.....55

The RFLINK-IO Wireless Switch Module is an easy-to-use module that instantly and painlessly upgrades a wired switch to a wireless switch(could be one to multiple suite). No additional coding and hardware equipment or other transmission modules are required to upgrade the device to a remotely controllable wireless control device 。

Module appearance and dimension

The RFLINK-IO module contains one root terminal (left) and up to four devices. The device side (on the right side of the figure below, numbered 1 to 4), outlook of root and device looks almost the same, they can be identified by the label on the back 。

As shown in the figure below, the ID of this group of RFLINK-UART modules is 0002.

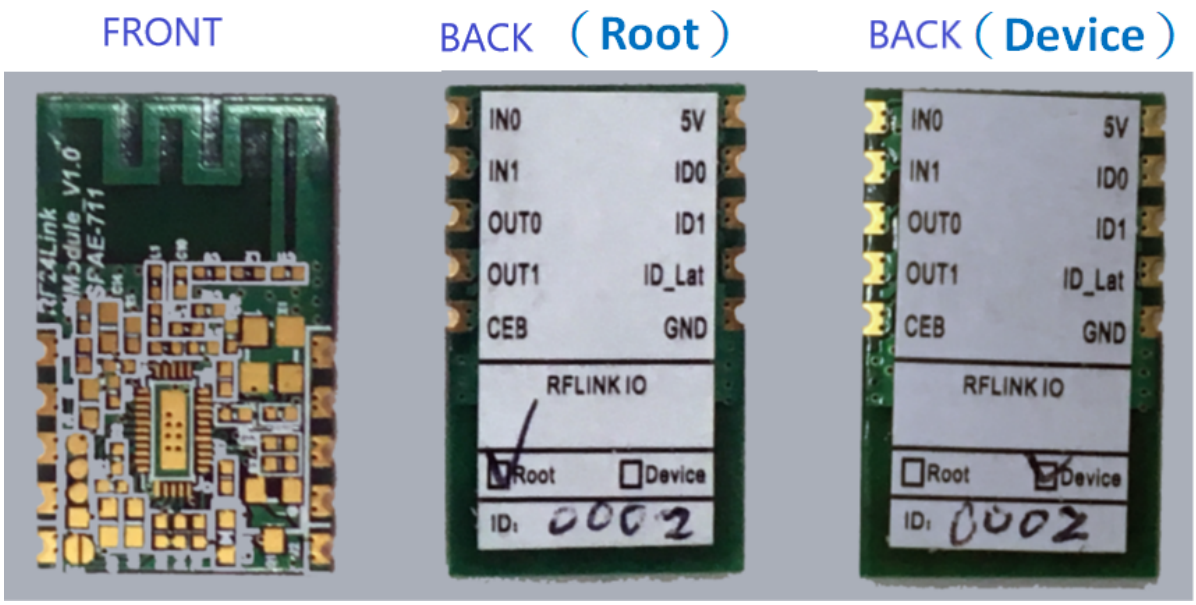

Module characteristics

All types of development boards and MCUs can use this module directly, and there is no need to install additional drivers or API programs.

1. **Operating voltage:** 3.3~5.5V
2. **RF Frequency**:2400MHz~2480MHz 。
3. **Power** consumption: 24 mA@ +5dBm at TX mode and 23mA at RX mode.
4. **Transmit power:** +5dBm
5. **Transmission rate:** 250Kbps

6. **Transmission distance: around** 80 to 100m in the open space
7. **Each module has two sets of I/Os.**
8. RFLINK-IO **suite can support one root to one device(2 sets of IO port) and one root to multiple devices(up to four) .**

Pin pin definition

Root	**Device**
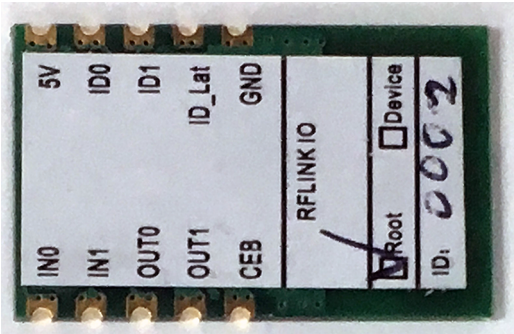	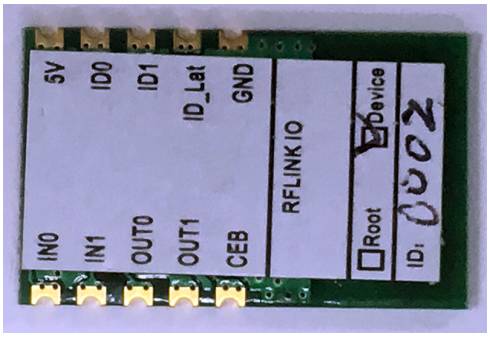
GND→ Ground **+5V**→ 5V voltage input **THE CEB**→ This CEB should connect to the ground (GND),then the module will be power-on and can be used as a power-saving control function. **IN0**→Input pin of the first IO port **IN1**→ Input pin of the second IO port **OUT0**→ Output pin of the first IO port. **OUT1**→ Output pin of the second IO port. **ID1, ID0** →selects which device to connect to via the HIGH/LOW combination of these two pins. **ID_Lat**→ Device ID Latch pins. When Root sets the target device via ID0, ID1, you need to set this pin LOW then the connection will officially be switched to the specified device.	**GND**→ Ground **+5V**→ 5V voltage input **THE CEB**→ This CEB should connect to the ground (GND),then the module will be power-on and can be used as a power-saving control function. **IN0**→Input pin of the first IO port **IN1**→ Input pin of the second IO port **OUT0**→ Output pin of the first IO port. **OUT1**→ Output pin of the second IO port. **ID1, ID0** →Number setting pin for IO device board. By the combination of these two pin , each IO device can be set to a different device #. **ID_Lat**→ This Pin foot has no effect on device.

How to use

The general switch is a 1-to-1 on/off switch, this RFLINK-IO can support 1-to-multiple mode, which means you can send on/off command to up to IO devices(and total 8 sets of IO ports)

The Root (#0) will connect to Device (#1) by default when powered on. At this time, Root and Device #1 can transmit On/Off between two sets of IO Messages. If you have a different number of Device (#2~#4), you can choose any one by ID0 and ID1 of the Root side. The Root sends different HIGH/LOW combinations to select the specific device. For more information about the ID0 and ID1 number combinations for setting and specifying the Device number, please refer to the table below.

	Device 1 (#1)	*Device 2 (#2)*	*Device 3 (#3)*	*Device 4 (#4)*
ID0 pin	HIGH	HIGH	LOW	LOW
ID1 pin	HIGH	LOW	HIGH	LOW

ID0, ID1 pin are default HIGH, they will be LOW via connecting to the ground.
Note: Device side should be set to the required device number according first, the root will choose the target device via the same table.

You can choose the different device to transfer message via the ID0 and ID1 of root, usually tie ID0 or/and ID1 to the GND. More than that, the root side can also send Low/High signal through the IO pin to choose the target device on the fly.

Example of use: Controlling a remote switch via the Arduino

For example, in the following figure, Arduino Nano connects the ID0 and ID1 pins of the RFLINK-IO Root through the D10 and D11 pins. Arduino Nano will send different High/Low combination signal to select the Device to be connected (after setting up, let the D12 pin send Low to the pin ID_Lat of the Device , then the connection is effective).Thus the root connects to the specified deivce and passes through D4 or D5 to control the signals of IN0 and IN1, its status will be synchronized at the OUT0 and OUT1 of the specific remote device.

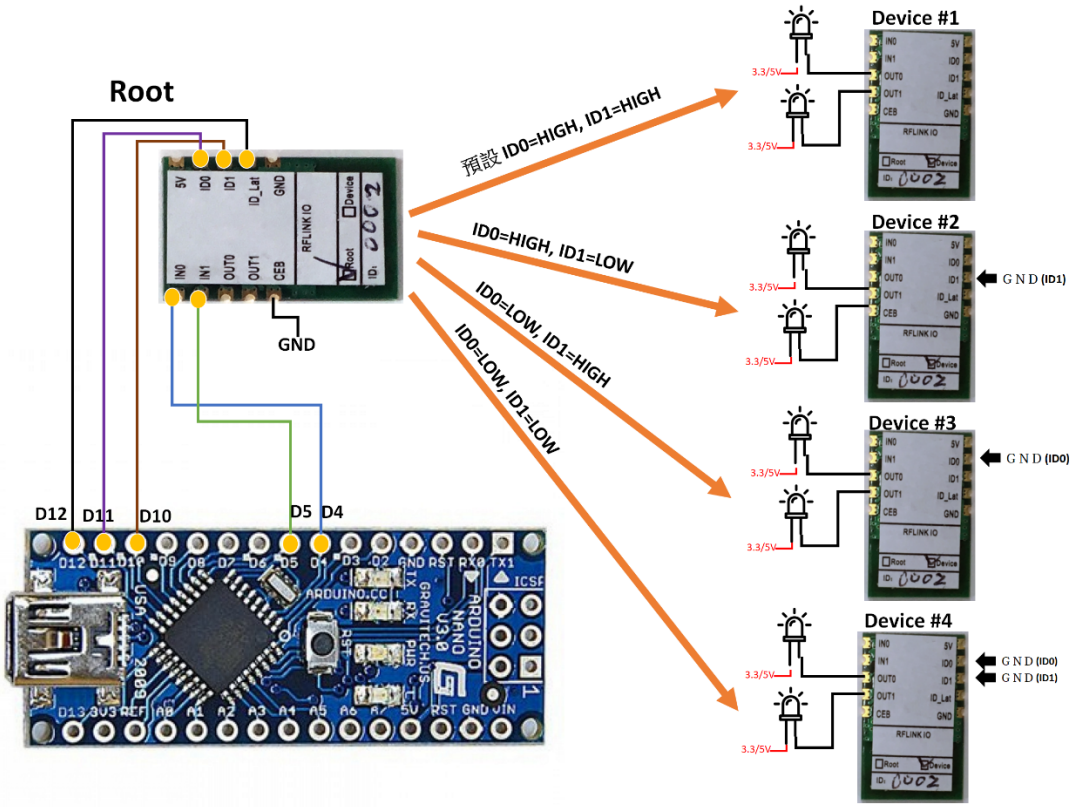

Note: The development board pins connected to RFLink-IO do not limit specific pins,

you can also change to other numbered pins.

Use the ID_LAT to start sending/receiving messages with the new connection

After sending the corresponding High/Low signal to the ID0 and ID1 pins, the Root terminal will interrupt the transmission with the old connection end (that is, stop the transmission and receiving with the old connection end). And wait for a Low signal from the ID_Lat pin to switch to the new connection.

That is, after you send the target device number signal via ID0, ID1, all transection between the root and the current connected device will be halted. The new transection won't start until you send a LOW signal of ID_Lat at least 3ms. The process is as follows:

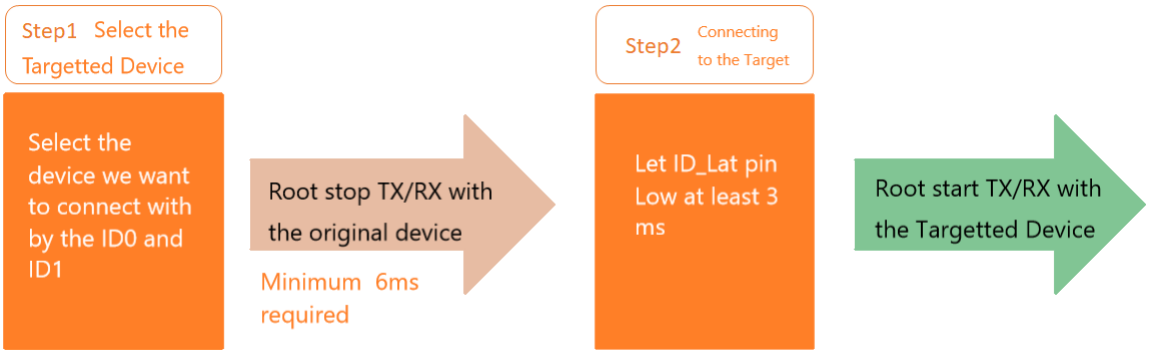
Step1 Select the Targetted Device
Select the device we want to connect with by the ID0 and ID1
Root stop TX/RX with the original device
Minimum 6ms required
Step2 Connecting to the Target
Let ID_Lat pin Low at least 3 ms
Root start TX/RX with the Targetted Device